Stepping Motors

T2515L Series

SPECIFICATIONS

Item	T0505N
Rated Voltage	DC 24V
Rated Current/Phase	500mA(RMS)
Coil DC Resistance	8.5Ω±10%
Step Angle	15°/step
Drive Method	Constant Current
Excitation Method	2-2 Phase excitation(Bipolar driving)
Insulation Class	Class E insulation
Push Force	2.8kg /600pps
Max. Pull-out Pulse Rate	2000pps
Max. Pull-in Pulse Rate	700pps
Rated Voltage	DC 24V

CHARACTERISTICS

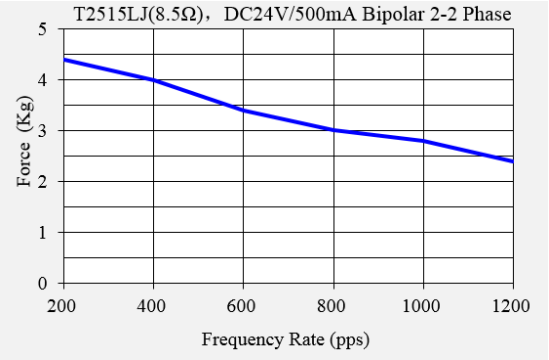

DIMENSIONS

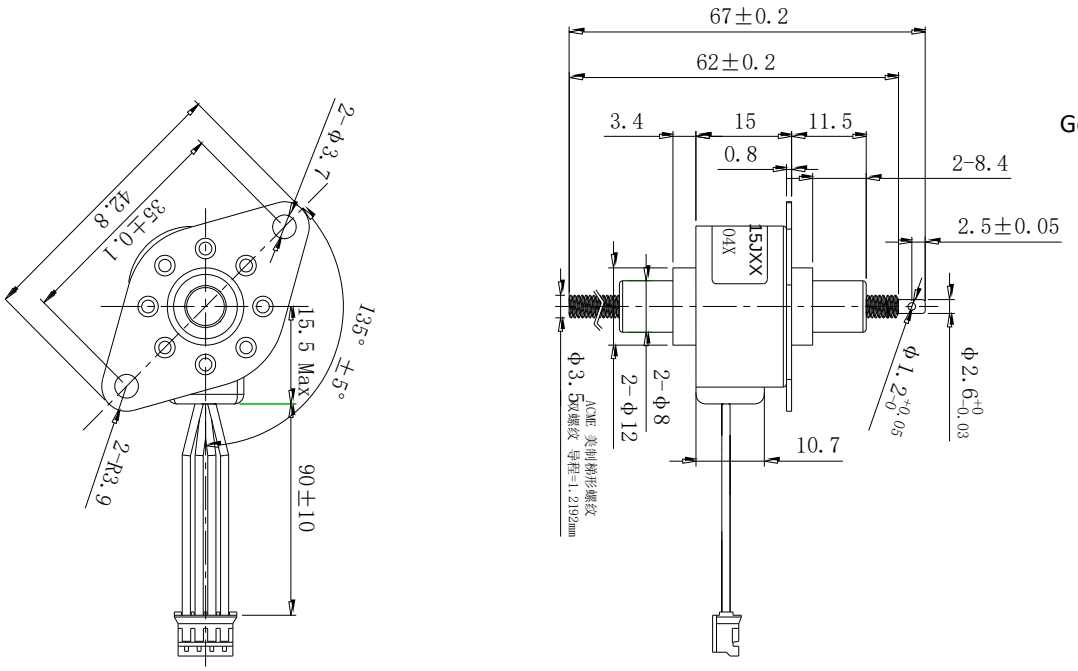

Unit : mm

General tolerance : ±0.1